PROJECT REFERENCE NO.	SHEET NO.
17BP.11.RJ46	2C-3
R/W SHEET NO.	

DOCUMENT NOT CONSIDERED FINAL UNLESS ALL SIGNATURES COMPLETED

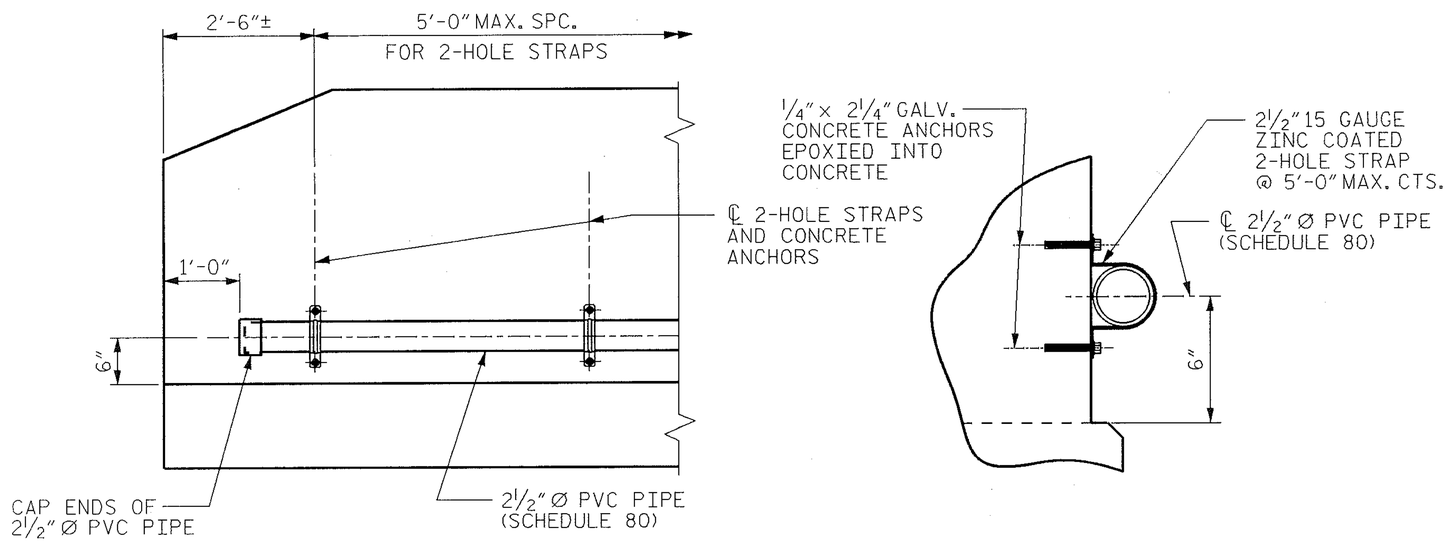

ELEVATION

SECTION

FIBER OPTIC CONDUIT SYSTEM DETAILS

2½" Ø SCHEDULE 80 PVC PIPE ATTACHED TO THE BACK OF BOTH RAILS FOR FUTURE FIBER OPTIC CABLE.

ADD TO NOTES:

FOR FIBER OPTIC CONDUIT SYSTEM, SEE SPECIAL PROVISIONS.

8/17/99
11/13/2019
R:\Roadway\Proj\980020_Rdy_psh_02C-3.dgn
rbollman